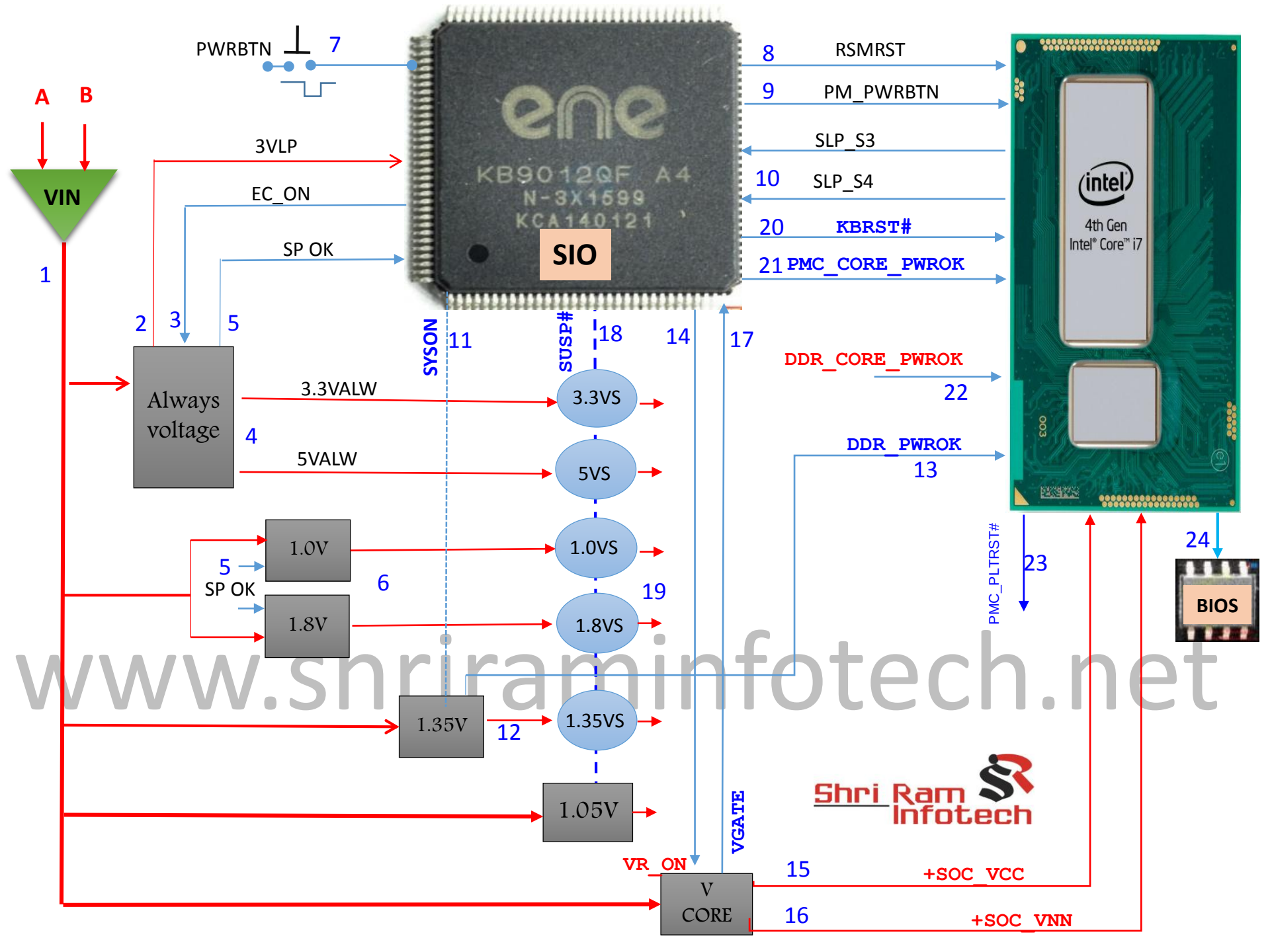

www.shriraminfotech.net